# RICOH Modification Bulletin



| Model: Kir-C Plate Cover | Date: 22-Oct-01 | No.: MB406001 |
|---|---|---|

| Modified Article: Platen Cover Feeler | Prepared by: K. Miura |
|---|---|
| From: Technical Services Dept., GTS Division | |

| Reason for Modification: | ☐ Parts catalog correction<br>☐ To facilitate assembly<br>☐ Part standardization | ☐ Vendor change<br>☒ To improve reliability<br>☐ Other | ☐ To meet standards<br>( ) |
|---|---|---|---|

The following parts have been changed to maximize paper size detection accuracy.
For details, please see RTB #RB040007.
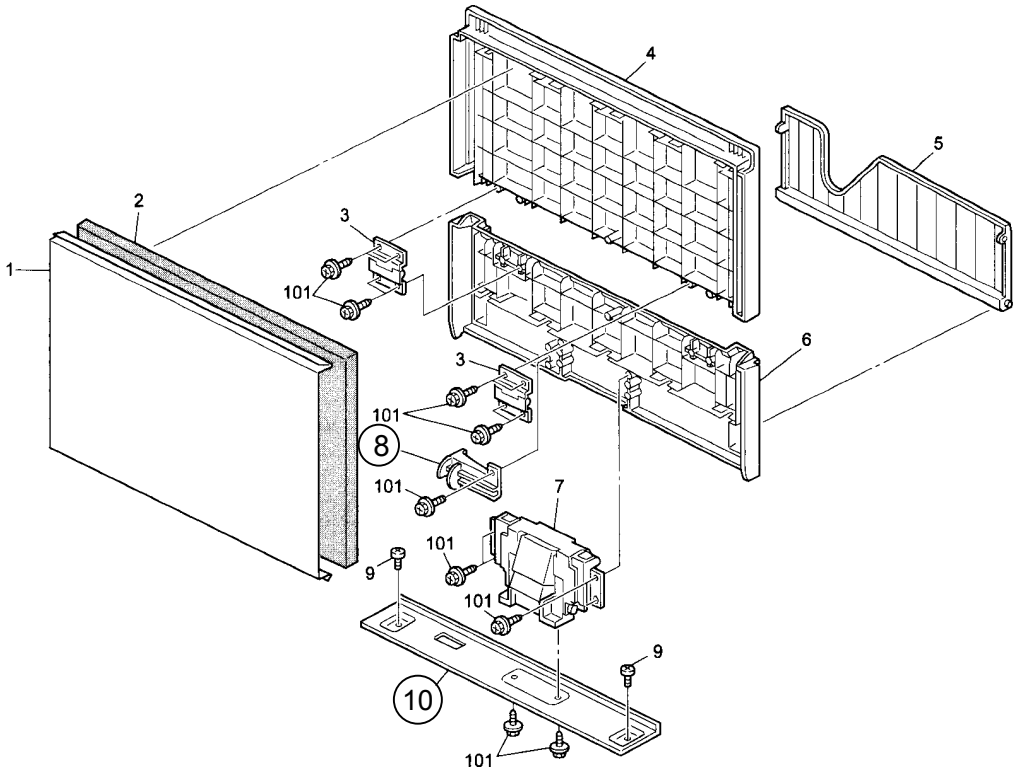
| Old part number | New part number | Description | Q'ty | Int | Page | Index | Note |
|---|---|---|---|---|---|---|---|
| A2501384 | B4061384 | Feeler - Platen Cover | 1 | X/O | 3 | 8 | |
| A2501383 | B4061383 | Bracket - Platen Cover | 1 | X/O | 3 | 10 | |